GLAM series

Industrial grade Q-switched diode pumped Nd: YVO_4 UV laser

Short pulse duration, high repetition rate and robust design make these lasers an attractive tool for wide range of material processing applications, including polymers, semiconductors, composites, dielectrics.

A diode pumped solid state Nd:YVO_4 UV lasers offer high output power of UV radiation together with high repetition rate.

The **innovative** electro-optical Q-switch is a key technology for generation of the record short pulses between all high power nanosecond lasers.

High beam quality together with short pulse duration and high output power make the UV laser to **high brilliance** source (tool) for processing of almost all engineering materials used in semiconductor and electronic industry.

Rugged body made of machined aluminum as well as **sealed cavity** ensures stable and reliable operation in diverse conditions of laboratory and factory working place.

The Glam series lasers are equipped with **intelligent control system**. Output power as well as other parameters of the laser is monitored continuously in order to ensure long term repeatability of performance and easy adaptation of the laser into high throughput material processing systems.

APPLICATIONS

- Marking
- Engraving
- Micromachining
- Ablation
- Drilling
- Cutting
- Structuring
- Trimming
- Mask repair
- Cleaning
- Your application is welcome...

FEATURES

- 0.4 W output power at 266 nm
- High brilliance UV radiation
- Up to 100 kHz repetition rate
- Robust and sealed cavity
- Low operating costs
- Electro-optical Q-switching
- First pulse suppression
- Internal output power monitoring
- Internal/external triggering
- Processor control via USB/CAN
- Remote control via keypad
- No external water cooling

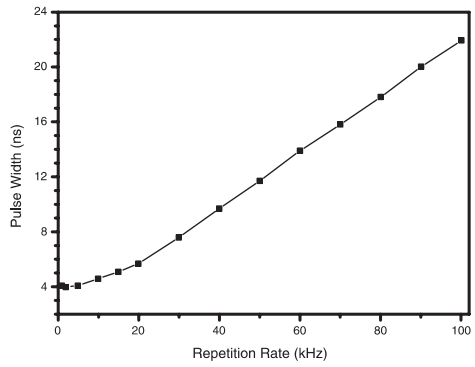

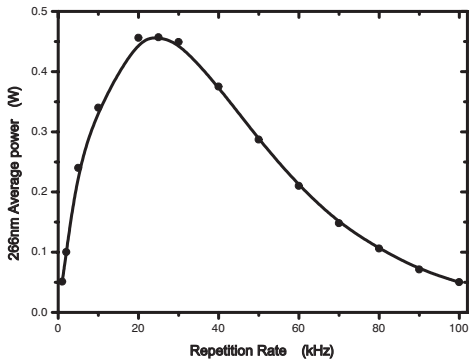

EKSPLA

Specifications

Model	Glam 4
Output wavelength, nm	266 nm
Output power, W	0.4 at 20 kHz
Pulse to Pulse energy stability, %	5 (rms) at 20 kHz
Power stability	± 3% over 8 hours when room temperature does not change more that +/- 2 ^{0}C.
Pulse duration, ns	4-25
Repetition rate, kHz	up to 100
Beam diameter, mm	~0.8
Beam profile	TEM00
M^2	<1.5
Beam divergence, mrad	1.1
Beam ellipticity	>0.8 @ 20 kHz
Polarization	Linear, horizontal>100:1
Timing jitter	<0.5 ns @ 1-50kHz
Physical characteristics	
Laser head size (W x H x L) , mm	286 x 114 x 710
Power supply/pump diode unit (W x H x L) , mm	472 x 289 x 461
Umbilical length, m	2.8
Operating requirements	
Ambient temperature, ^{0}C	18-27
Relative humidity (non-condensing), %	10-80
Voltage	100-240 VAC, single phase 50/60 Hz
Power, kW	<0.25

Glam 4

Laser head outline drawing

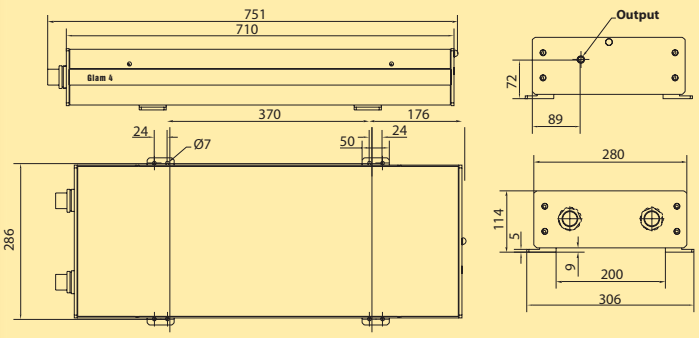

Power supply outline drawing

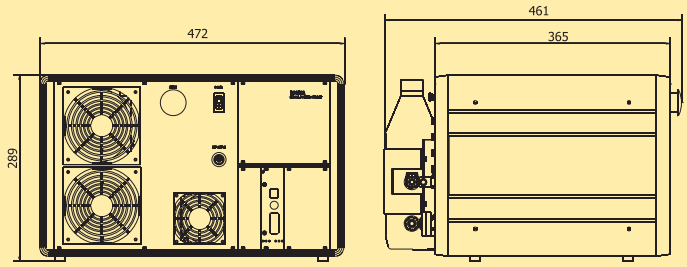

EKSPLA

Lasers and Laser Systems Div.
Savanoriu av. 231
02300 Vilnius – 53
Lithuania

Ph.: +370 5 2649629
Fax: +370 5 2641809
sales@ekspla.com
www.ekspla.com

ISO 9001 certified

Find local distributor at
www.ekspla.com

Revision number – 081015